ALF70G162EL400

ALF70, Aluminum Electrolytic, 1,600 uF, 20%, 400 VDC, -40/+85°C, 25 mm

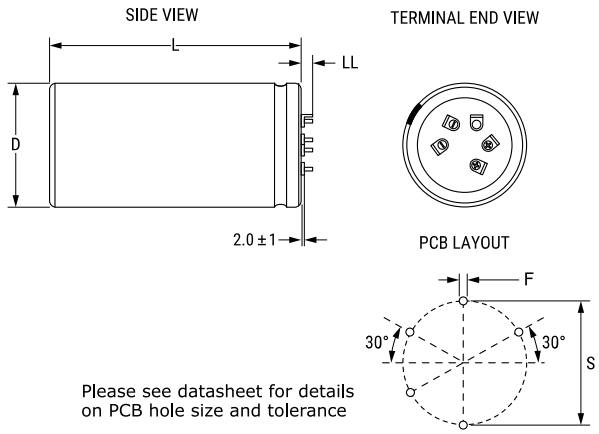

Click here for the 3D model.

General Information	
Series	ALF70
Dielectric	Aluminum Electrolytic
Style	Press-Fit
Description	Aluminum Electrolytic
RoHS	Yes
Lead	5 Pin Press-Fit
Halogen Free	Yes
Typical Component Weight	165 g
Notes	Dimensions D And L Include Sleeving.
Shelf Life	156 Weeks

Dimensions	
D	40mm +1mm
L	80mm +/-2mm
S	25mm +/-0.1mm
LL	5.5mm +/-1mm
F	1.486mm +/-0.076mm

Packaging Specifications	
Sleeving	Yes
Packaging	Bulk

Specifications	
Capacitance	1,600 uF
Tolerance	20%
Voltage DC	400 VDC, 440 VDC (Surge)
Temperature Range	-40/+85°C
Rated Temperature	85°C
Life	18000 Hrs (Rated Voltage and Ripple Current at 85C), 29000 Hrs (Rated Voltage at 85C)
ESR	92.3 mOhms (100Hz 20C), 50.63 mOhms (10kHz 20C)
Ripple Current	5.265 Amps (100Hz 85C), 10.65 Amps (10kHz 85C)
Leakage Current	3840 uA (5min 20°C)

Statements of suitability for certain applications are based on our knowledge of typical operating conditions for such applications, but are not intended to constitute - and we specifically disclaim - any warranty concerning suitability for a specific customer application or use. This Information is intended for use only by customers who have the requisite experience and capability to determine the correct products for their application. Any technical advice inferred from this Information or otherwise provided by us with reference to the use of our products is given gratis, and we assume no obligation or liability for the advice given or results obtained.

© 2006 - 2026 YAGEO