ALA7DA561EE500

ALA7D, Aluminum Electrolytic, 560 uF, 20%, 500 VDC, -40/+85°C, 10 mm

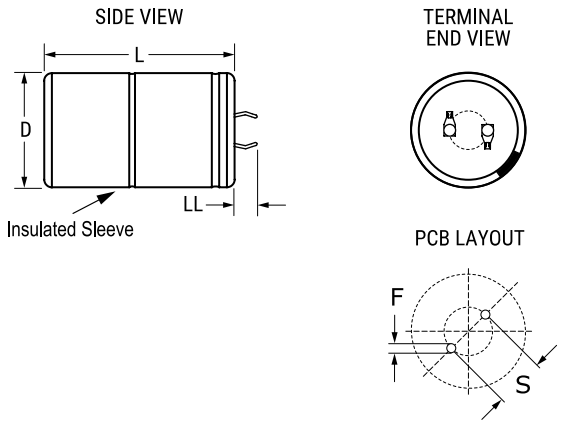

Click here for the 3D model.

General Information	
Series	ALA7D
Dielectric	Aluminum Electrolytic
Description	Snap-In, Aluminum Electrolytic
RoHS	Yes
Lead	2 Pin
Qualifications	AEC-Q200
Halogen Free	Yes
Typical Component Weight	95 g
Miscellaneous	Vibration: <= 35mm 1.5mm displacement amplitude or 20G maximum acceleration. Vibration applied for three directions of 4-hour sessions at 10-2,000 Hz. (Capacitor clamped by body.).
Shelf Life	156 Weeks

Dimensions	
D	40mm +1mm
L	45mm +/-2mm
S	10mm +/-0.1mm
LL	6.3mm +/-1mm
F	2mm +/-0.1mm

Packaging Specifications	
Packaging	Tray

Specifications	
Capacitance	560 uF
Tolerance	20%
Voltage DC	500 VDC, 550 VDC (Surge)
Temperature Range	-40/+85°C
Rated Temperature	85°C
Life	18000 Hrs (Rated Voltage and Ripple Current at 85C), 29000 Hrs (Rated Voltage at 85C)
ESR	428 mOhms (100Hz 20C), 320 mOhms (10kHz 20C)
Ripple Current	2.893 Amps (100Hz 85C), 5.371 Amps (10kHz 85C)
Leakage Current	1680 uA (5min 20°C)

Statements of suitability for certain applications are based on our knowledge of typical operating conditions for such applications, but are not intended to constitute - and we specifically disclaim - any warranty concerning suitability for a specific customer application or use. This Information is intended for use only by customers who have the requisite experience and capability to determine the correct products for their application. Any technical advice inferred from this Information or otherwise provided by us with reference to the use of our products is given gratis, and we assume no obligation or liability for the advice given or results obtained.

© 2006 - 2026 YAGEO