AE0505D16DF

Aliases (UPAE005051600D)

KEMET, AE, Piezo Ceramic Actuators, Multilayer

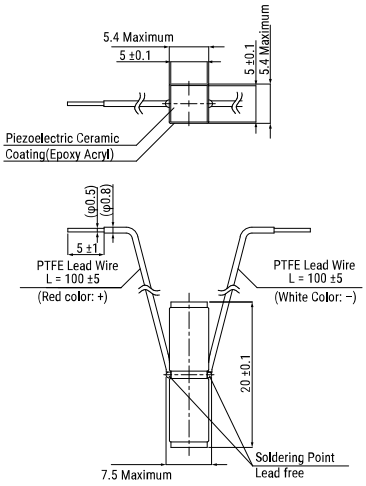

Click here for the 3D model.

General Information	
Style	Resin Coated
Description	Resin Coated Type Multilayer Piezoelectric Actuators
RoHS	With Exemptions
SCIP Number	294b4799-b00c-43e2-a15f-798c927a3ac8
REACH	SVHC (PZT – CAS 12626-81-2)

Dimensions	
W	5mm +/-0.1mm
W2	5.4mm MAX
H	20mm +/-0.1mm
T	5mm +/-0.1mm
T2	5.4mm MAX
LL	100mm +/-5mm

Packaging Specifications	
Typical Component Weight	5.2
Packaging	Bulk
Packaging Quantity	4

Specifications	
Series	AE
Displacement	17.4um +/-2um
Voltage DC	150 VDC
Capacitance	1.4 uF
Tolerance	20%
Resonant Frequency	69 kHz
Tensile Strength	85 N
Young's Modulus	4.4x10^10 N/m^2
Generated Force	850 N
Stiffness	48.9 N/um
Insulation Resistance	10 MOhms
Temperature Range	-25/+85°C

Statements of suitability for certain applications are based on our knowledge of typical operating conditions for such applications, but are not intended to constitute - and we specifically disclaim - any warranty concerning suitability for a specific customer application or use. This Information is intended for use only by customers who have the requisite experience and capability to determine the correct products for their application. Any technical advice inferred from this Information or otherwise provided by us with reference to the use of our products is given gratis, and we assume no obligation or liability for the advice given or results obtained.

© 2006 - 2026 YAGEO