AE035035D18H18DF

KEMET, AE, Piezo Ceramic Actuators, Multilayer

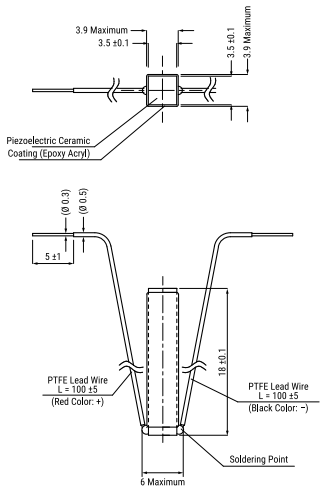

Click here for the 3D model.

General Information	
Style	Resin Coated
Description	Resin Coated Type Multilayer Piezoelectric Actuators
RoHS	Yes
REACH	Yes

Dimensions	
W	3.5mm +/-0.1mm
W2	3.9mm MAX
H	18mm +/-0.1mm
T	3.5mm +/-0.1mm
T2	3.9mm MAX
LL	100mm +/-5mm

Packaging Specifications	
Typical Component Weight	2.3
Packaging	Bulk
Packaging Quantity	4

Specifications	
Series	AE
Displacement	19um +/-2um
Voltage DC	150 VDC
Capacitance	0.8 uF
Tolerance	20%
Resonant Frequency	76 kHz
Tensile Strength	41 N
Young's Modulus	4.4x10^10 N/m^2
Generated Force	410 N
Stiffness	21.6 N/um
Insulation Resistance	10 MOhms
Temperature Range	-25/+85°C

Statements of suitability for certain applications are based on our knowledge of typical operating conditions for such applications, but are not intended to constitute - and we specifically disclaim - any warranty concerning suitability for a specific customer application or use. This Information is intended for use only by customers who have the requisite experience and capability to determine the correct products for their application. Any technical advice inferred from this Information or otherwise provided by us with reference to the use of our products is given gratis, and we assume no obligation or liability for the advice given or results obtained.

© 2006 - 2026 YAGEO