080MS26AAMK1STD

MS/A902, Aluminum Electrolytic, 80 uF, 10%, 260 VAC, -20/+60°C

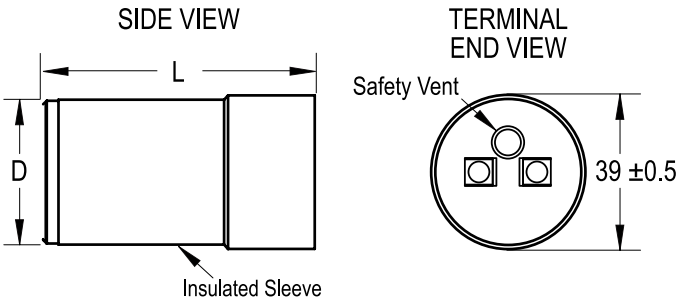

General Information	
Series	MS/A902
Dielectric	Aluminum Electrolytic
Description	Motor Start Aluminum Electrolytic
RoHS	Yes
Lead	Quick Connect
Halogen Free	Yes
Shelf Life	156 Weeks

Click here for the 3D model.

Dimensions	
D	38mm +/-0.5mm
L	75mm MAX

Packaging Specifications	
Packaging	Bulk, Bag

Specifications	
Capacitance	80 uF
Tolerance	10%
Voltage AC	260 VAC
Temperature Range	-20/+60°C
Rated Temperature	60°C
Life	500 Hrs

Statements of suitability for certain applications are based on our knowledge of typical operating conditions for such applications, but are not intended to constitute - and we specifically disclaim - any warranty concerning suitability for a specific customer application or use. This Information is intended for use only by customers who have the requisite experience and capability to determine the correct products for their application. Any technical advice inferred from this Information or otherwise provided by us with reference to the use of our products is given gratis, and we assume no obligation or liability for the advice given or results obtained.

© 2006 - 2026 YAGEO